SENSE AMPLIFIERS

CIRCUIT FOR CALCULATION OF SRAM DELAY

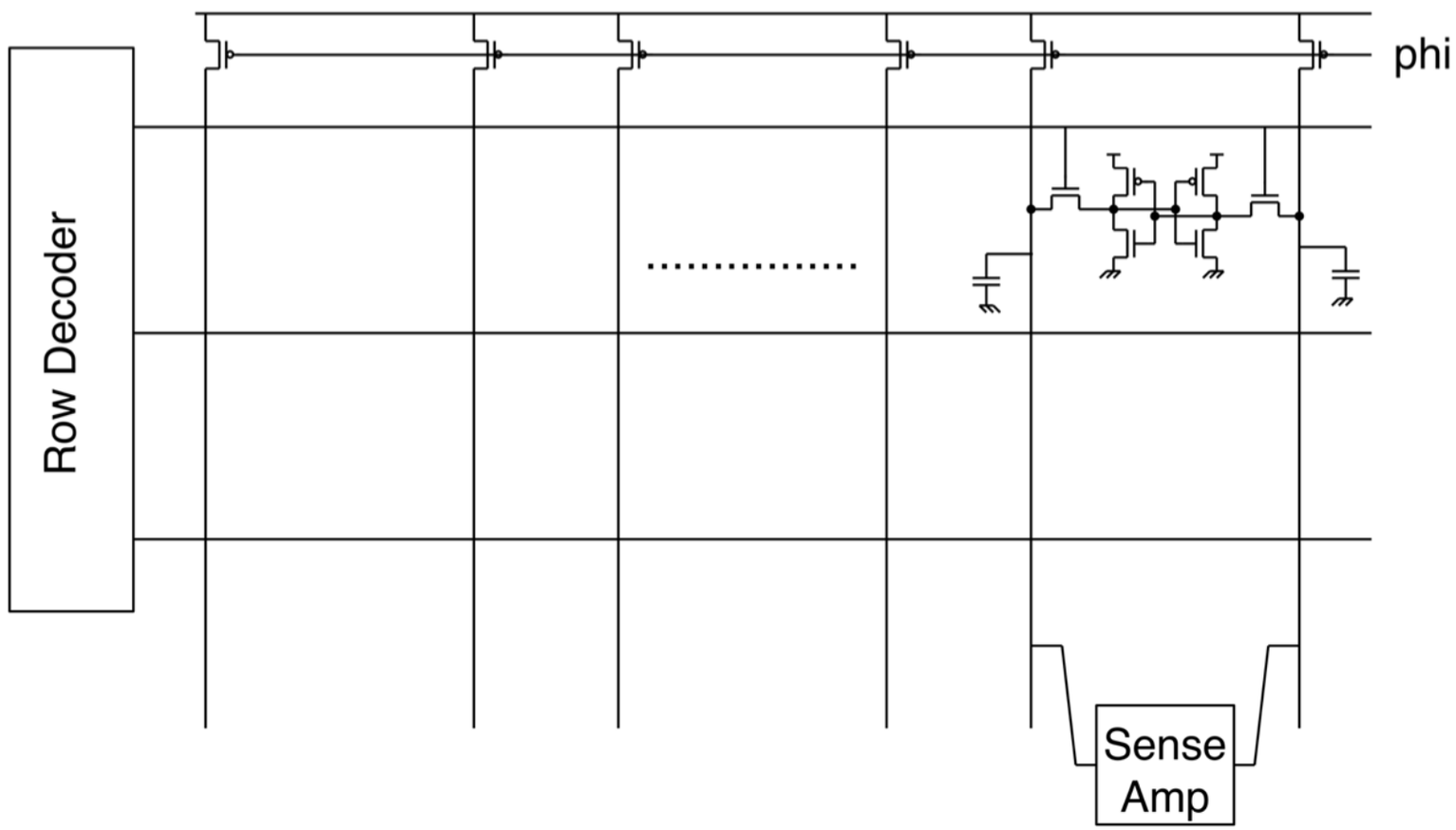

- Once the cell establishes enough differential potential
  - Fire up the sense amplifier, it will quickly do the rest

WHAT ARE SENSE AMPLIFIERS

- Differential amplifiers or latch based amplifier
- Only one per column (bit line pair)
  - Can size it large without as much impact on array density
- Decouple CBL

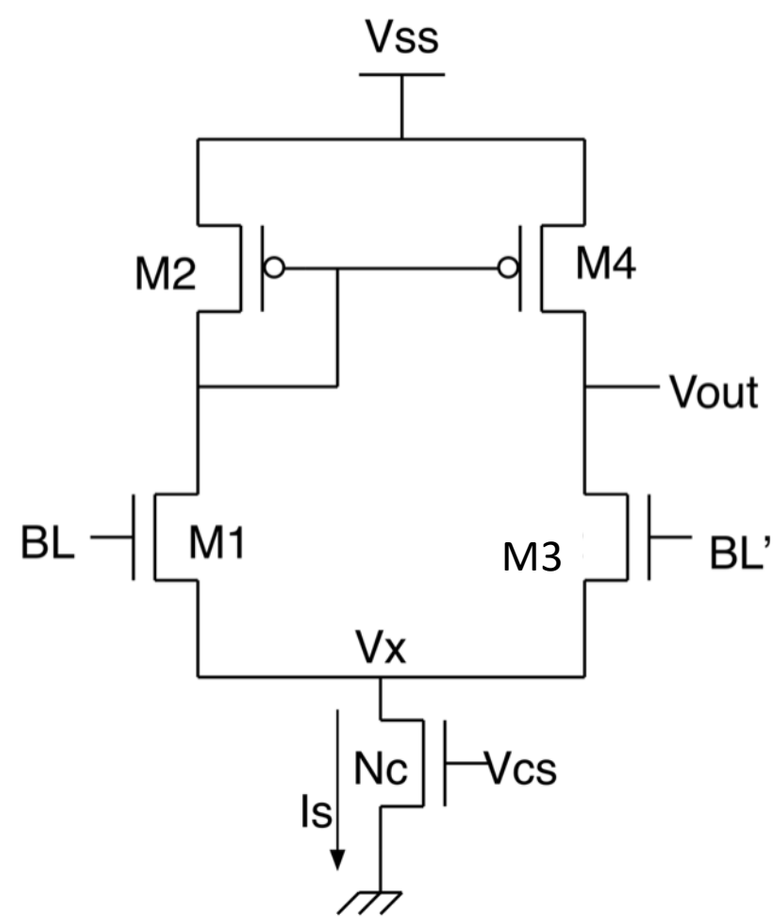

WHAT ARE SENSE AMPLIFIERS

- Nc is always sat
  - Acts as a current source
- Common mode input to M1 and M2 ensures enough headroom
- M2 and M4 form a current mirror
  - Differential to single ended converter

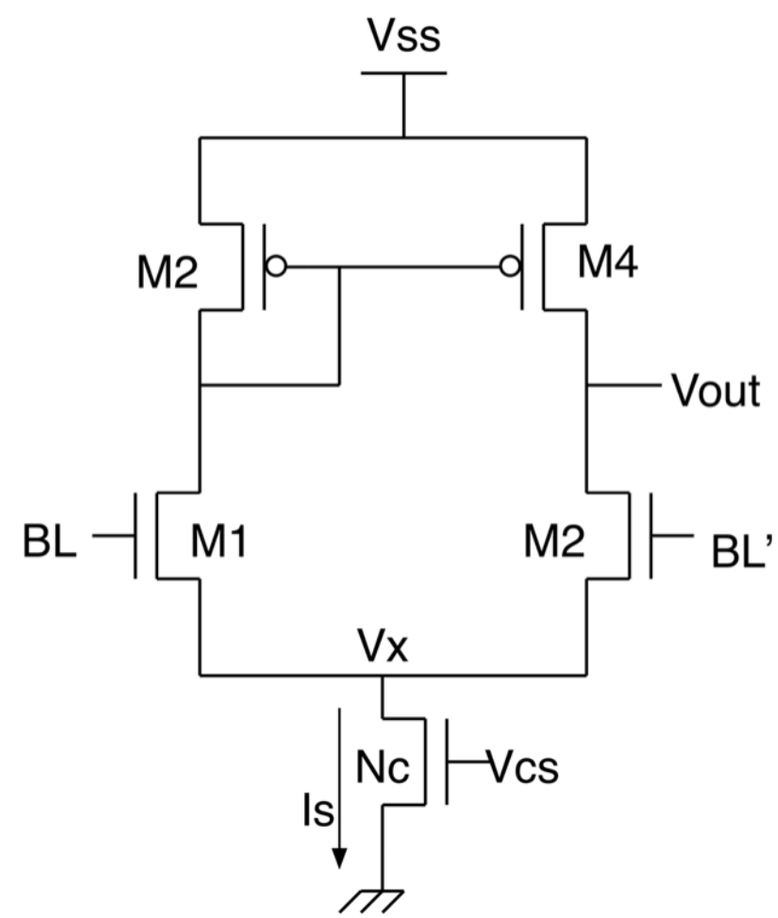

DIFFERENTIAL AMPLIFIER DESIGN

- Need full current switching
  - Linearity not as much a concern
  - We need to sense BL and respond to the same direction quickly
- Speed more a concern than gain
- Usually designed as a multi-stage amplifier
- $V_{out} = A_{diff}(\Delta V_{BL}) = g_m(r_{oN}//r_{oP})(\Delta V_{BL})$

$$\Delta t = \frac{C_{out}\Delta V_{out}}{I_{available}}$$

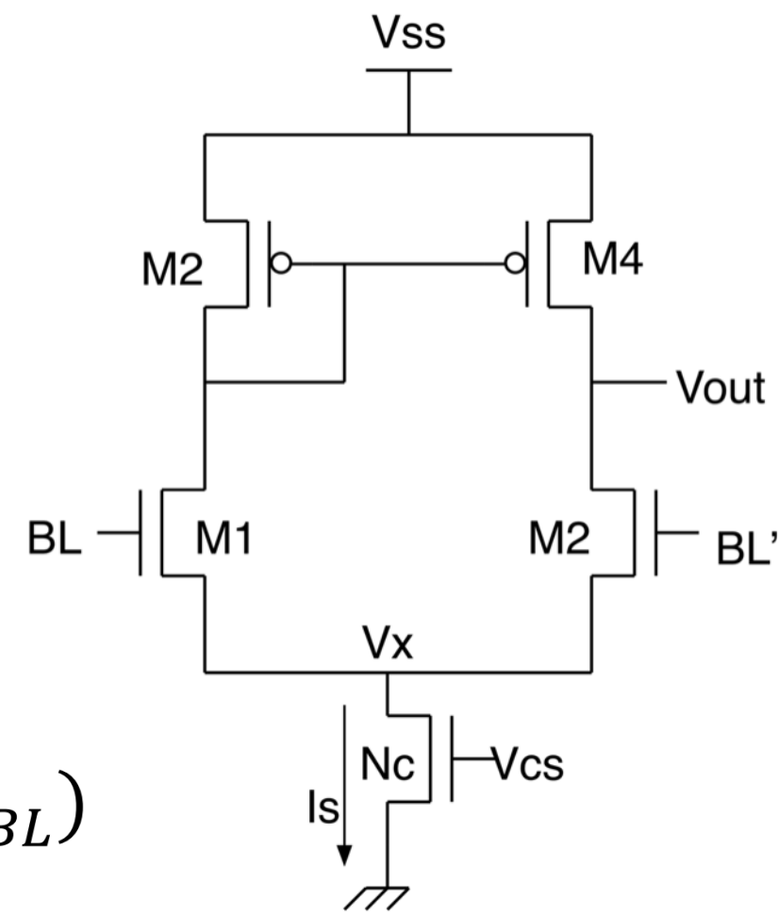

DIFFERENTIAL AMPLIFIER DESIGN

- The amp derive a small output capacitance
- The time constant will be much smaller

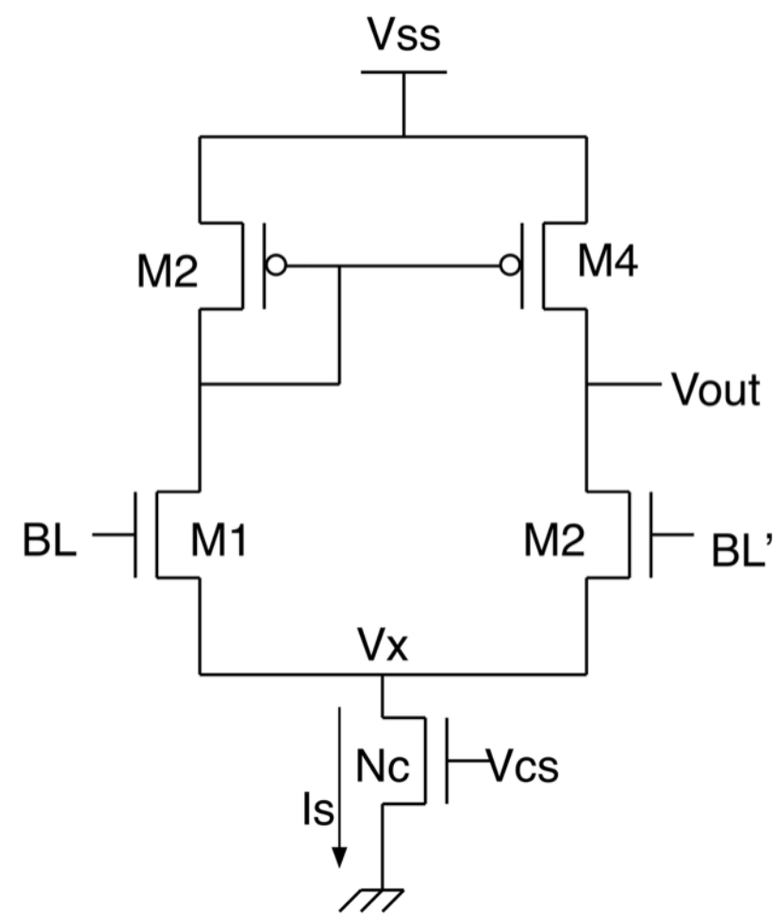

LATCH BASED SENSE AMPLIFIER

- The core of the amplifier is the inverter pair M1 through M4
- M5 acts as an enabling transistor
- Meq is used to establish complete equality between BL and BL’ during the precharge, very crucial
- Ms is pass transistor

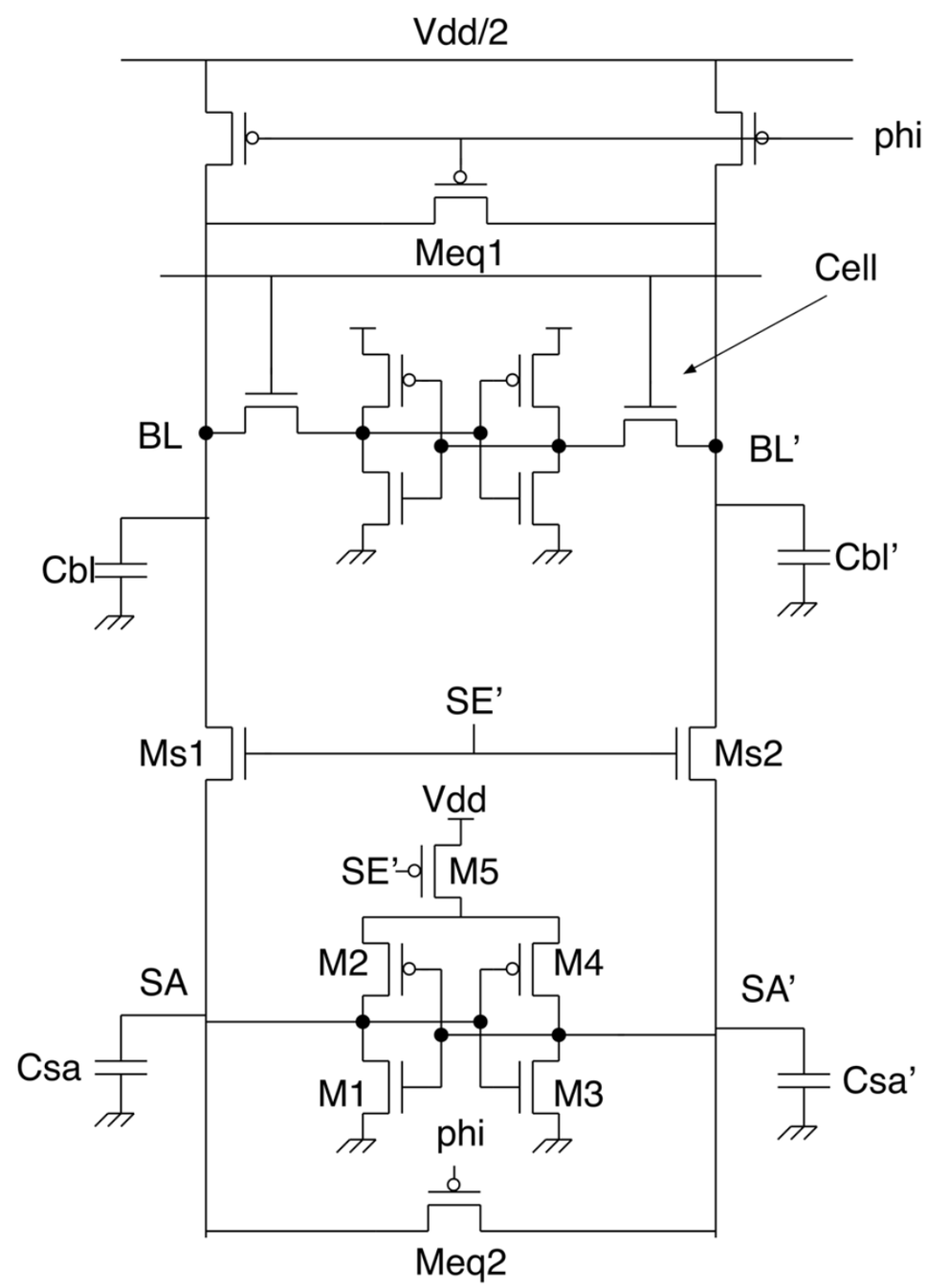

TIMELINE FOR SENSE AMPLIFIER

- Precharge bit lines to Vdd/2
- Enable WL
  - Wait for BL and BL’ to establish enough difference
- Enable SA
  - Observe as SA and SA’ magnify difference

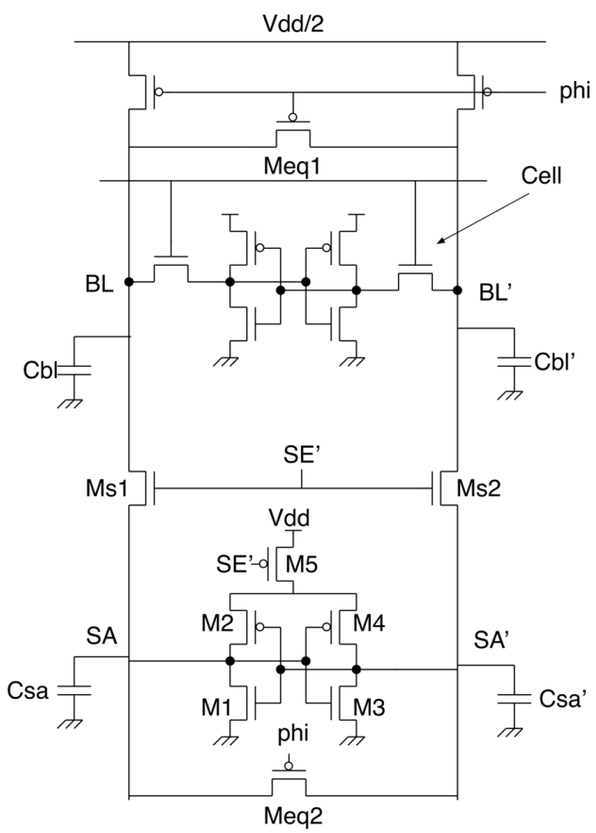

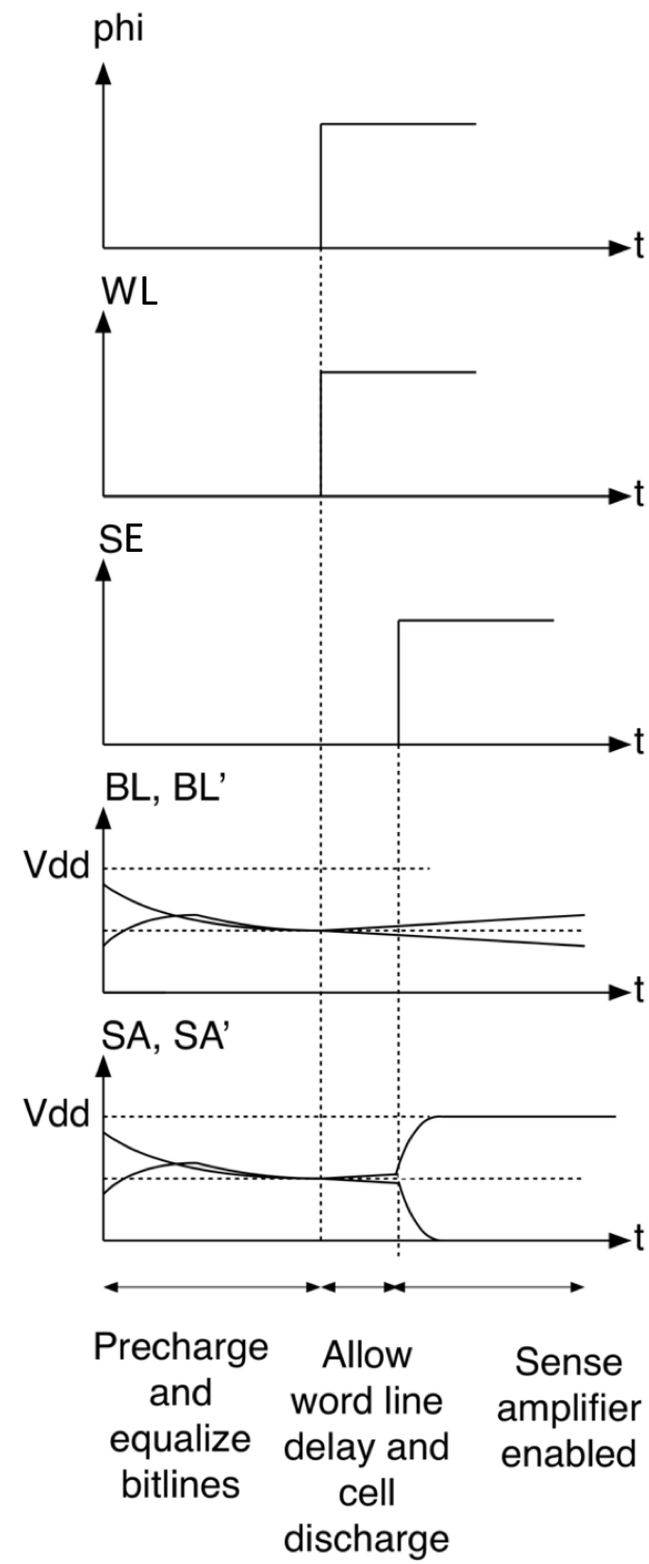

WHY DOES THE LATCH SA WORK?

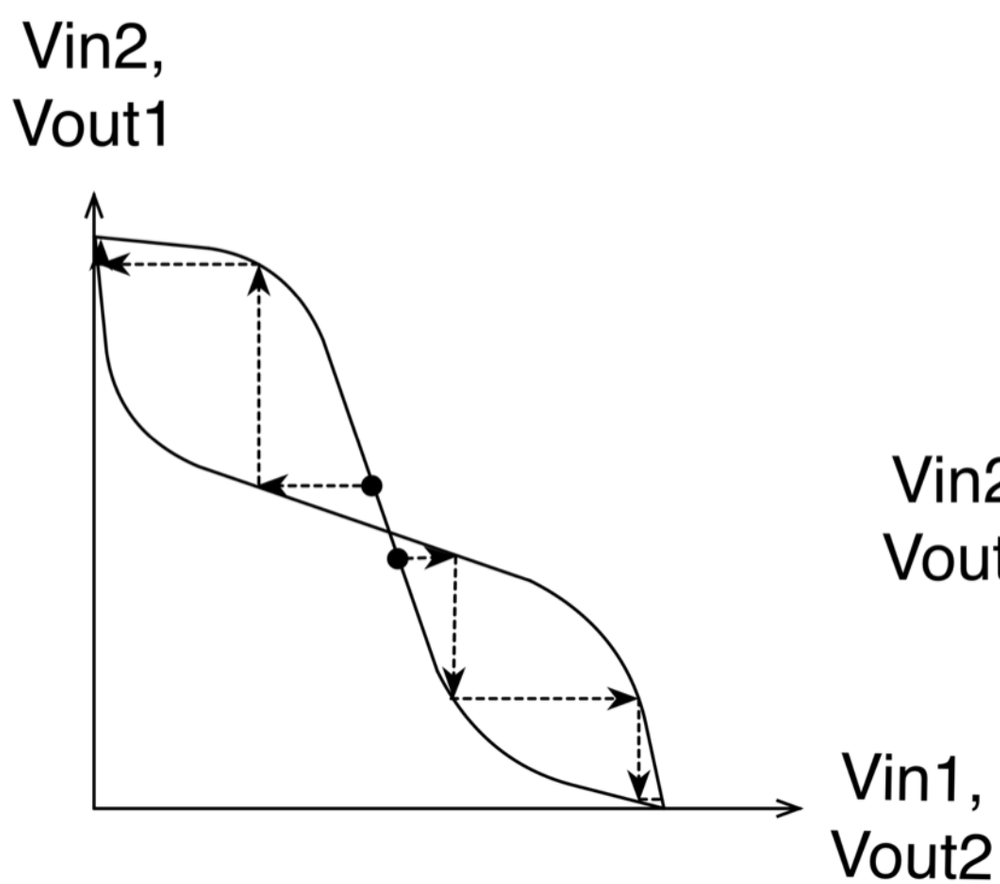

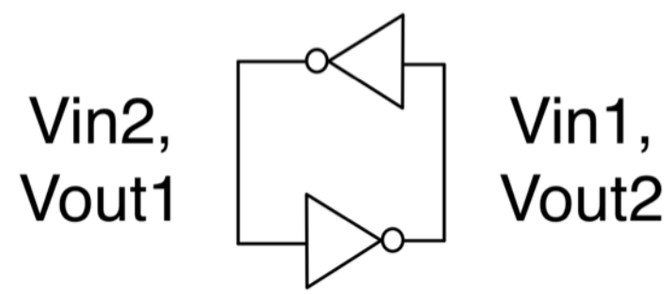

ESTIMATING SA DELAY

- The initial voltage greatly controls the time to resolve
- For C_{sa}
- $I_{Csa} = C_{sa}\frac{dV_{SA}}{dt}$ (cap equation)
- $I_{Csa} = g_m V_{SA'}$
- For $C_{sa'}$
- $I_{Csa'} = C_{sa}\frac{dV_{SA'}}{dt}$ (cap equation)
- $I_{Csa} = g_m V_{SA}$

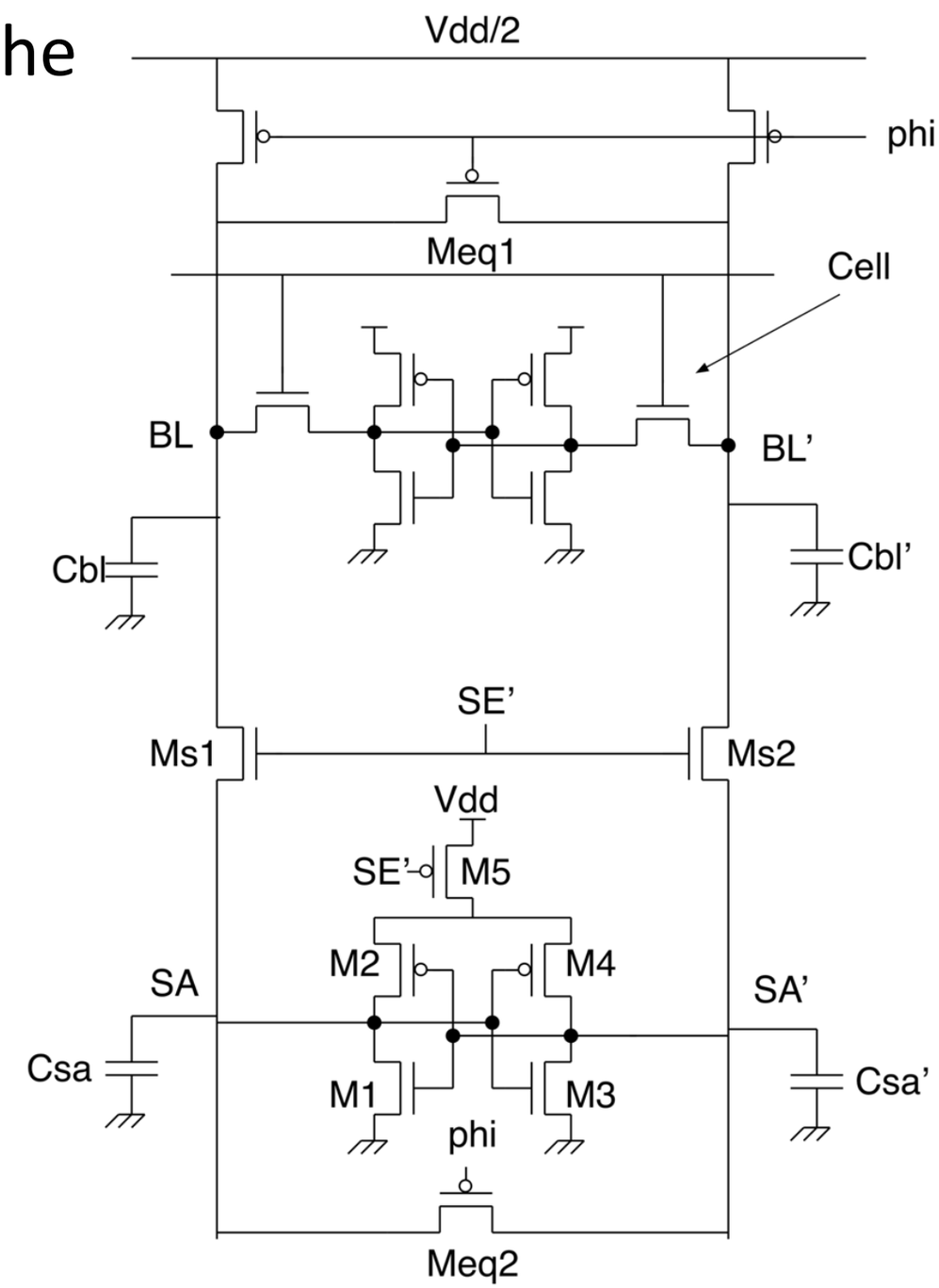

ESTIMATING SA DELAY
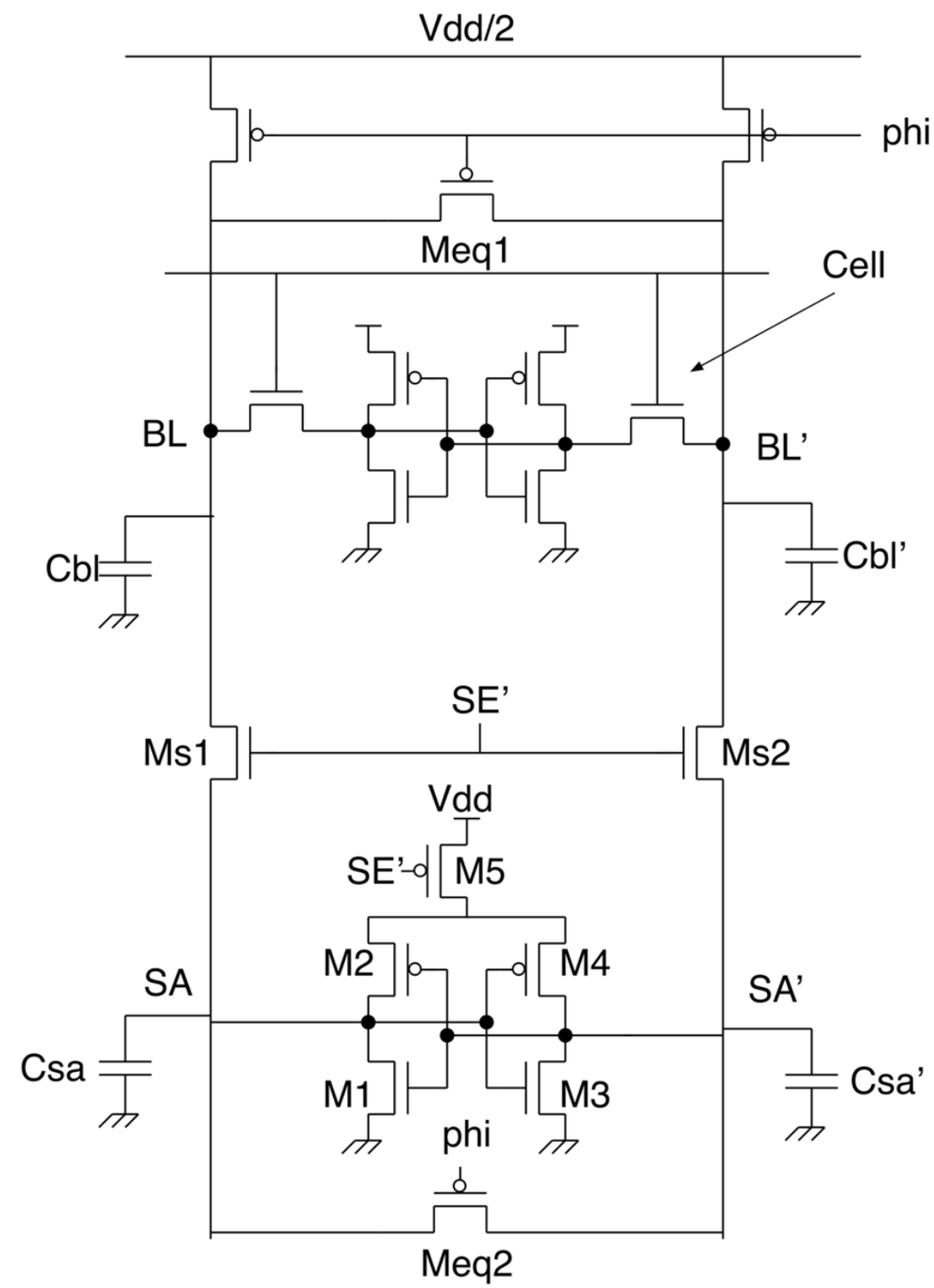
- $\Delta I_{Csa} = g_m \Delta V_{SA}$
- $\Delta V_{SA} = V_{SA} - V_{SA'}$
- $\Delta I_{Csa} = g_m \Delta V_{SA} = C_{SA} \frac{d\Delta V_{SA}}{dt}$
- $\Delta V_{SA} = \Delta V_{SA}(0) e^{tgm/C_{SA}}$
- $\tau = \frac{C_{SA}}{gm}$. This could be small
- $t = \frac{C_{SA}}{gm} \ln\left(\frac{\Delta V_{SA}}{\Delta V_{SA}(0)}\right)$